PRODUCT INFORMATION

LEVINA

5377PJP125P30-13/11 7001/3000

EAN 4031582368802
Order number 00037408

BETTER MOBILITY. BETTER LIFE.



Image may differ from the original product

PERFORMANCE

Roll performance	● ● ● ○ ○
Movement noise	● ● ● ● ○
Attrition	● ● ● ○ ○
Corrosion resistance	● ● ● ● ○

CORE ATTRIBUTES

Product name	Levina
Housing type	Swivel castor with total lock
Standard	EN12530 - Devices Castors
Load capacity at 3 km/h	100 kg
Load capacity Static	200 kg
Temperature range (Minimum)	-10 °C
Temperature range (Maximum)	40 °C
Overall height	161 mm
Overall width	59 mm
Overall weight	0.567 kg

WHEEL

Body material	Polypropylene
Tread material	Thermoplastic rubber
Bearing	Precision ball bearing
Wheel color	Silver grey (RAL7001)
Threadguards	With threadguard
Diameter	125 mm
Tread width	32 mm
Body width	32 mm
Hardness of tread (A)	87 Shore A

HOUSING

Material	Polyamide
Fork shape	Slim
Swivel bearing	Two ball races
Colour	Silver grey (RAL7001)
Offset	38 mm
Swivel radius	100.5 mm
Swivel interference	201 mm
Dome diameter	59 mm

FITTING

Fitting type	Bolt hole
Bolt hole diameter	13 mm

Universal Design Award

Deutscher Designer Club

© Copyright 2025 TENTE International GmbH

LEVINA

5377PJP125P30-13/11 7001/3000

EAN 4031582368802
Order number 00037408

BETTER MOBILITY. BETTER LIFE.

TECHNICAL DRAWINGS

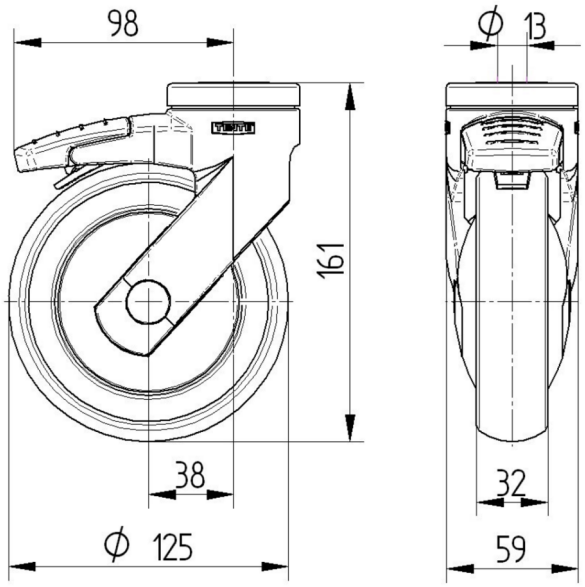

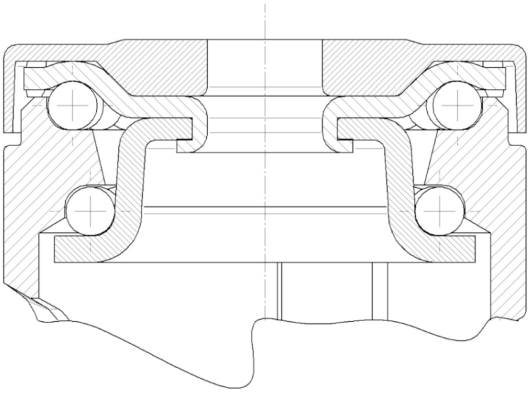

Universal Design Award

Deutscher Designer Club

© Copyright 2025 TENTE International GmbH